Welcome

Kadzama Company thanks you for purchasing our continuous chocolate heating and tempering machine.

This operating manual is an integral part of this equipment and its main purpose is to ensure the safe use of the machine throughout its entire service life, from unpacking to disposal.

Kadzama strongly recommends that everyone who will be allowed to interact with this equipment carefully studies this document. We also ask you to note that each user must have constant access to these instructions.

If your manual has been damaged during use, rendering it unusable, or if it has been lost, please request a copy via official email at support@kadzama.com or download it from kadzama.com.

Kadzama is the developer of this equipment and therefore may make changes to the design of the machine and the user manual as necessary, which may result in some discrepancies between the equipment itself and the images shown in this manual.

5 kg: Dimensional size 430 x 240 x 175 mm

10 kg: Dimensional size 460 x 385 x 180 mm

20 kg: Dimensional size 540 x 340 x 240 mm

1. Main information **4**
1.1 Symbols used 4
1.2 Content and purpose 5
1.3 Protection of the manual 5
1.4 Appearance and details 5
1.5 Information about the manufacturer 7
1.6 Identification plate 7
1.7 Intended use 7
1.8 Operating environment 8
1.9 Noise level 8
1.10 Technical specifications 8
1.11 Storage 9

1.12 Disposal 9
1.13 Warranty 9
1.14 Personnel qualifications (general, service technician, manufacturer) 10
2. Safety 10
2.1 Safety information 11
2.2 Safety restrictions 11
2.3 Safety and protection devices (buttons, switches, fuses) 11
2.4 Protective parts 12
2.5 User safety measures 12
2.6 Personal protective equipment 13
2.7 Other risks 13
2.8 Compliance with technical standards 14
3. Delivery and transport 14
3.1 General provisions 14
3.2 Packaging 14
3.3 Transportation 14
3.4 Unpacking 15
4. Installation part 15
4.1 Installation 15
4.2 Required working area 15
4.3 Equipment installation 15
4.4 Connection to the electrical network 15
4.5 Operational preparation 16
4.6 Start-up 16
5. Operating section 16
5.1 Control element identifiers 16
5.2 Button functions 17
5.3 Operating modes and technologies 17
5.3.1 Chocolate tempering 17
5.3.2 Quick start 18
5.3.3 Chocolate recrystallisation 18
5.3.4. Adding chocolate to the tempering container 19
5.4 Warning 19
5.5 Controller manual 20
5.5.1 Blocking and unblocking 20
5.5.2 Setting up the primary parameters 20
6. Maintenance and repair 21
6.1 General information 21
6.2 General safety precautions 21
6.3 Breakdowns and repairs 21
6.4 Cleaning external parts 23
6.5 Cleaning mechanical parts 23
6.6 Electrical diagram 23

6.7 Checklist of malfunctions 24

1. Main information

For simplicity and ease of use, all information in this manual is divided into topics and located in the section to which it relates. However, if you have difficulty understanding or interpreting the statements in this manual, please contact Kadzama's technical support service for clarification.
Everyone who will be allowed to interact with this machine must read and understand the information contained in this manual.

1.1 Symbols used

Attention. These messages are designed to draw attention, especially in processes that require it. Failure to comply with this requirement may endanger the life and health of the user and cause damage to individual parts of the equipment or the equipment as a whole.

Warning. These messages are used to draw attention to processes in which incorrect use may result in damage to the equipment or its individual parts.

Environment. These messages are intended to draw the user's attention to processes, actions or consequences that may harm the environment.

Notes. These messages contain explanations, notes and recommendations that will be useful to the user during operation and are of a recommendatory nature.

1.2 Content and purpose

- The purpose of this manual is to provide all users interacting with this equipment with the necessary and sufficient information for its correct use, maintenance and safe application for themselves and those around them.
- This manual complies with EU requirements and standards and contains all the necessary instructions to ensure the highest level of use of the relevant equipment.
- The following requirements must be observed:
- Every operator, technician or other person authorised to interact with this equipment is required to carefully study these instructions.
- The person responsible for occupational safety in the workplace must ensure that all personnel authorized to interact with this equipment have read these instructions and understand the basic principles of operation of this equipment.
- All rules and recommendations contained in these instructions must be observed throughout the entire period of operation of the equipment, from transport to disposal.

1.3 Protection of the manual

This manual is an integral part of the equipment and therefore all safety requirements contained in this manual apply to it.

The following rules must be observed with regard to the manual itself:

1. Store in a place protected from open flames and moisture.
2. Store in a place accessible to personnel authorised to interact with the equipment.
3. Do not use this manual with dirty hands.
4. Do not make any changes to the text or images in this manual.
5. Do not tear or crumple the pages of this manual.

1.4 Appearance and details

1 - tempering container
2 - housing
3 - temperature controller
4 - Kadzama logo
5 - tempering container lid
6 - mounting screws
7 - on/off button
8 - power socket
9 - product information label

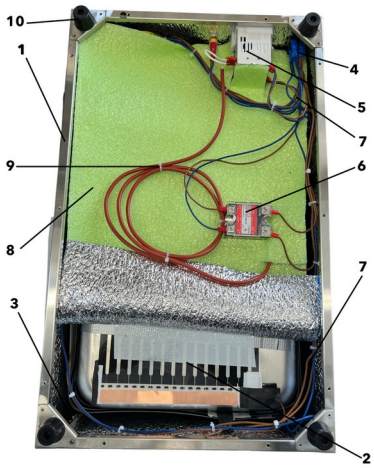

1 - tank body
2 - heating element
3 - heating element contact point
4 - on/off button connector
5 - temperature controller
6 - thermal relay
7 - connecting wires
8 - tank insulation
9 - temperature sensor wire
10 - tank legs

1.5 Information about the manufacturer

The equipment described in this manual has been developed and manufactured by brand Kadzama (all rights are protected).
Full name of legal entity: Kadzama Manufacture d.o.o.
Legal and actual address: Proletarska cesta 4, 1000, Ljubljana, Slovenia
e-mail: sales@kadzama.com
Website: kadzama.com

1.6 Identification plate

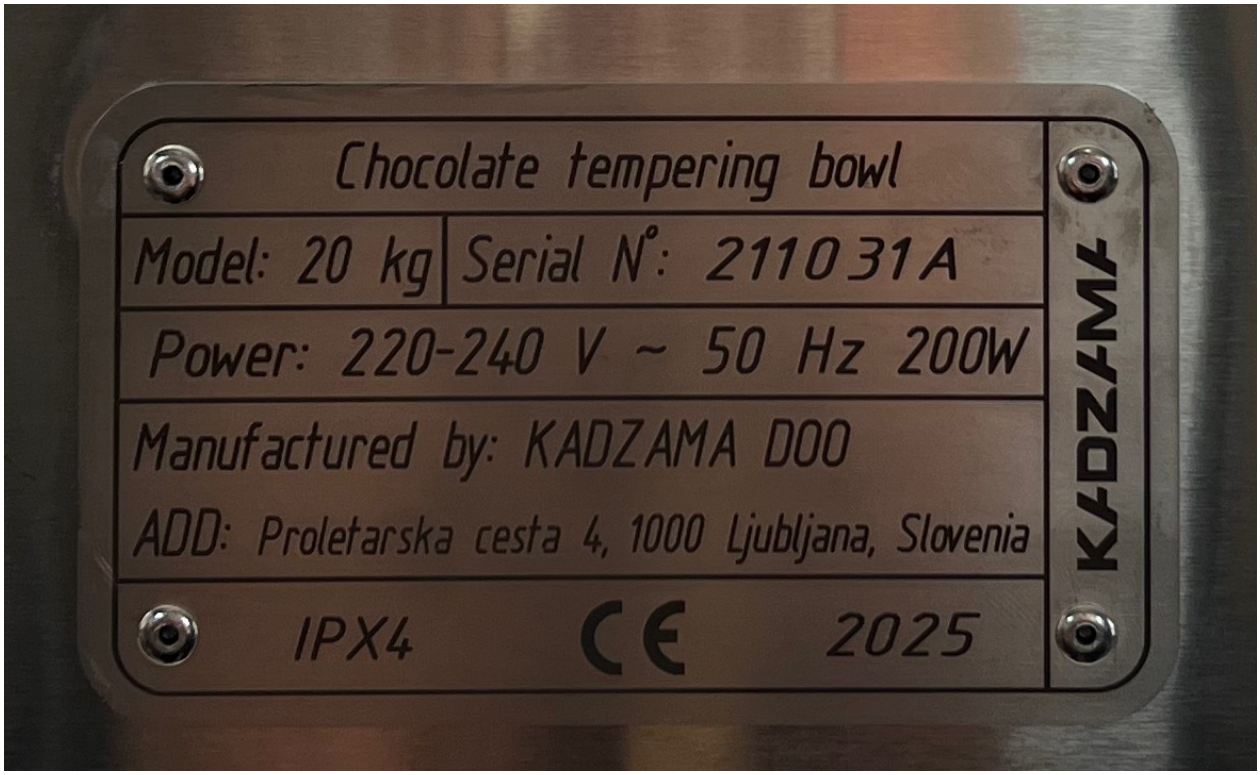

Line 1 - Product name
Line 2 - Model and serial number
Line 3 - Voltage and power
Line 4 - Manufacturer information
Line 5 - Place of manufacture information
Line 6 - Safety and compliance markings, year of manufacture

1.7 Intended Use

The tempering container is designed for tempering chocolate. Suitable for use with milk, pink, and white chocolate.

1.8 Operating environment

This equipment is designed for operation at temperatures of 15-25 degrees Celsius and relative humidity no greater than 70%. The equipment must be protected from harmful weather and atmospheric conditions (such as rain, frost, hail, etc.).

Any worker permitted to work on this equipment must ensure that there is no open flame or explosives in the immediate vicinity of the equipment.

1.9 Noise Level

The noise level of this equipment when turned on does not exceed the permissible limit of 60 dB.

1.10 Technical specifications

Loading capacity: 5 kg
Tank material: Stainless steel
Cabinet material: Stainless steel
Insulation material: Foamed polyethylene, aluminum foil
Total equipment weight: 6.9 kg

Power consumption: 0.2 kW
Voltage, phases: 220/50
Operating temperature range: 20-50°C
Minimum load: 3 kg
Maximum load: 5 kg
Bowl volume: 5.7 l

Loading capacity: 10 kg
Tank material: Stainless steel
Cabinet material: Stainless steel
Insulation material: Foamed polyethylene, aluminum foil
Total equipment weight: 10.4 kg

Power consumption: 0.2 kW
Voltage, phases: 220/50
Operating temperature range: 20-50°C
Minimum load: 5 kg
Maximum load: 10 kg
Bowl volume: 10 l

Loading capacity: 20 kg
Tank material: Stainless steel
Cabinet material: Stainless steel
Insulation material: Foamed polyethylene, aluminum foil
Total equipment weight: 8.3 kg

Power consumption: 0.2 kW
Voltage, phases: 220/50
Operating temperature range: 20-50°C
Minimum load: 5 kg
Maximum load: 20 kg
Bowl volume: 13 l

1.11 Storage

Be sure to empty the tempering container of food waste after each use.

Store the unit on a flat surface with ample space. Turn off the unit using the power button and unplug the main power cable.
When using the container in a set with other equipment, turn off all additional equipment and clean according to the relevant section of the instructions.

1.12 Disposal

All components of this equipment must be disposed of in accordance with the applicable laws of the country in which it is disposed of. All electronic and electrical materials must be separated, and all rubber and plastic components must be disposed separately.

1.13 Warranty

Based on EU Directive 1999/44/EC

Kadzama provides a 12-month warranty for this equipment model. This warranty covers failure of the electrical or mechanical components included with this machine, when used properly and in accordance with all instructions contained in this manual, the warranty is void if this equipment is repaired by unqualified personnel or if the identification plate containing the manufacturer's information and serial number is removed. Equipment repair works must be performed only by authorized persons approved by the manufacturer. External mechanical damage, as well as unauthorized modifications and changes to the equipment, may affect the safety and operation of the equipment completely, and the equipment warranty will be voided.
During the warranty period the manufacturer undertakes to repair the equipment in the event of a breakdown or replace defective parts. In cases where repairs must be performed at the service center, the manufacturer covers the cost of transporting the equipment during the warranty period. Cleaning of equipment or its parts is not covered by the warranty.

1.14 Personnel qualifications (general, service technician, manufacturer)

Only qualified and trained personnel may operate the equipment. Any maintenance must also be performed only by qualified personnel.

Every person authorized to operate or perform maintenance must read and understand the information contained in this manual.

Electrical service

An electrical maintenance specialist must have a general knowledge of electrical circuits, as well as knowledge of the specific circuits and components used in the equipment. Furthermore, such a specialist must be certified to operate the equipment.
The technician must disable the equipment's safety device before servicing. Any person authorized to work on this equipment may begin work only after all electrical controllers and components are in their designated locations and in working order.

Any action not described in this manual may only be performed by a specialist authorized by the manufacturer.

Mechanical Maintenance

A mechanical service technician must be authorized to operate the equipment. Additionally, such a technician must have access to disable the equipment's safety device. A mechanical service technician must have general and specialized knowledge of the operation of the given model and must also be able to service and repair the mechanical part of the equipment.

ATTENTION!
This specialist is NOT AUTHORIZED to work with the electrical components of the equipment or to inspect exposed wiring.

2. Safety

This user manual has been compiled taking into account the requirements of the international standard EN 60204-1 and Directive 2006/42/EC (Machinery), applying the directive IEC 60364-4-41 and the standard EN ISO 12100

2.1 Safety information

Failure to comply with safety precautions and regulations is dangerous and may result in accidents and pose a threat to the life and health of any employee authorized to work on this equipment or to perform its maintenance or repair.

The Safety Specialist or the person responsible for safety is obliged to conduct safety training and inform each specialist authorized to work, repair or perform maintenance on this equipment about the risks that may arise when using this equipment.Anyone authorized to operate this equipment must exercise extreme caution in situations that may pose a hazard. Improper use of the equipment, as well as allowing untrained personnel to operate it, can lead to accidents.The use of additional tools, mechanisms and technologies is also prohibited if this could create a danger to the specialist or others.
In case of violation of the instructions described in this section of the manual, the manufacturer is not liable for any damage.

2.2 Safety restrictions

The warnings and instructions contained in this manual do not cover every possible situation a worker authorized to operate this equipment may encounter. The manufacturer recommends that such a worker rely on experience, professionalism, and common sense.

Each section of this manual contains a list of safety precautions relevant to the topic. Responsibility for the use of this equipment is on the authorized personnel, which is described in the Qualified Personnel section.

Any personnel who have not received safety training or who have not received permission from a safety specialist MAY NOT BE ALLOWED to operate, maintain or repair this equipment.

2.3 Safety and protection devices (buttons, switches, fuses)

A power button is located on the outside of the equipment frame. Ensure the button is in the OFF position before each use, and always return to the off position after use.

All defective, damaged or aged safety components must be replaced with parts supplied or approved by the manufacturer. All safety devices must be properly installed during machine use.

2.4 Protective parts

The machine is equipped with a protective panel (see pic.). You can remove the panel with a screwdriver, allowing access to the interior of the machine for maintenance. The protective panel can be removed with a suitable tool. Once the screws are removed, remove the panel and store it in a safe place. The front corners of all protective panels are smooth, rounded and free of sharp metal burrs to prevent injury to the operator and other personnel.

Do not operate the machine if the protective panels are not in place or are installed incorrectly with the wrong screws. Remember to remove tools and other foreign objects from the inside of the machine after performing maintenance!

Any work that involves removing or replacing the protective panel, safety devices and other safety components may only be carried out during machine maintenance work.

2.5 User Safety Measures

- The user must take safety precautions around the machine.
- When installing the machine, pay particular attention to the following:
- Proper grounding is available
- Adequate lighting for routine and emergency situations
- Adequate ventilation
- Clearly marked emergency exits
- Ensuring a power supply connection in accordance with applicable laws and the machine's specifications
- Availability of a suitable waste collection and disposal area, including hazardous or special waste (such as broken parts)
- Adequate fire safety systems and equipment
- Signs prohibiting unauthorized person from entering the production area.

The customer of the equipment must also:

- Educate operators and maintenance technicians
- Educate operators in basic machine functions
- Ensure access to all necessary information for maintenance personnel called in from outside the plant to perform work on the machine.
- Maintain a maintenance log.

2.6 Personal protective equipment

Any specialist authorized to interact with this equipment must have personal safety equipment, shoes, gloves, etc., as these items will provide additional protection against risks that may arise during work. Operators must also be equipped with the necessary hygiene products (hat, hairnet, apron, shoe covers, etc.). If the overall noise level in the work area exceeds 85 dB, wear suitable hearing protection.

Attention!
All personnel operating or servicing the machine must wear clothing that complies with the relevant European standards or the Occupational Health and Safety regulations of the country where the machine is located.

To avoid injury or other risks, do not wear items such as bracelets, watches, rings or necklaces during operation and maintenance.

2.7 Other risks

Compliance with all the instructions described in this documentation will minimize the risks associated with the use of this equipment.

Any mechanical or electronic modifications to the equipment are strictly prohibited, as this will create additional hazards and unforeseen risks for its users.

Risk of Electric Shock:
Before performing any work on electrical components, disconnect the machine from the power supply. (In accordance with IEC 60364-4-41)

Inflammation Risk:
In case of fire, do not spray water on or around the appliance. Disconnect the power supply and use only a CO2 extinguisher.

Equipment Transportation Risks:
Equipment and its individual components must be positioned and secured in strictly designated areas and elevated to a height sufficient for movement. Transportation must be performed by qualified personnel.

Environmental Pollution Risk:

Caution! Improper disposal of this equipment or its individual components, as well as failure to comply with the disposal instructions in this manual, may cause significant harm to the environment!

2.8 Compliance with technical standards

The machine has been designed and tested in accordance with the directives defined in the necessary conditions for health and safety in the EU and TSE regulations.

3. Delivery and Transport

3.1 General Provisions

Before moving the equipment, read the weight information and general instructions on the packaging. Personnel not responsible for transporting the machine should remain outside the work area.

3.2 Packaging

The machine is shipped assembled in a cardboard box. The image below shows the packaged version of the equipment.

3.3 Transportation

Equipment must be transported using a vehicle capable of lifting the load. After loading the equipment into the vehicle, ensure it is adequately secured to prevent movement or fall during transportation. Whilst transporting this equipment with other equipment, ensure that the other equipment will not damage this equipment during transit.
Also, ensure that the route to the destination is clear before moving the equipment.

3.4 Unpacking

Using a utility knife, cut the tape securing the top of the cardboard box, then open the box and remove the device.

Note!
Save the original packaging! If the machine needs to be returned to the manufacturer for special service or repair, the packaging will be required.

4. Installation part

4.1 Installation

Before placing the machine, ensure that the frame, components, or parts will not be damaged during installation.
The surface on which the machine will be placed must be sufficiently strong and suitable for the machine's weight. The customer is responsible for ensuring that the surface meets these requirements.
The floor where the machine is installed must be reasonably level.
The machine should be positioned away from other equipment in the assembly area.
If any damage to the machine or any of its parts is detected, notify the manufacturer immediately.

4.2 Required Working Area

To prepare the required work area and installation space, the equipment dimensions are provided to scale in Section 1.13.

4.3 Equipment Installation

Before placing the equipment, ensure that the housing and any individual components will not be damaged during installation.

Warning:

Make sure no items are left in the container or bowl during installation!

4.4 Connection to the electrical network (subject to application of Directive 2014/35/EU)

The equipment should only be connected to the electrical network by qualified personnel and in accordance with applicable laws. The electrical power supplied must comply with the electrical requirements of the machine. Machine requirements are indicated on the rating plate in the relevant section of this manual.

4.5 Operational preparation

After installing the equipment and connecting it to the electrical network, make sure there are no objects inside, and clean any elements contaminated during the installation process. If the equipment has been exposed to low temperatures for some time, it is necessary to warm up the equipment to room temperature before use.

4.6 Start-up

Make sure all instructions in this manual have been followed correctly. Start the equipment by pressing the power button. The indicator light and the temperature controller panel will light. Ensure that the safety devices, emergency protection devices, and other equipment are functioning properly**.**

5. Operating section

5.1 Control Element Identifiers

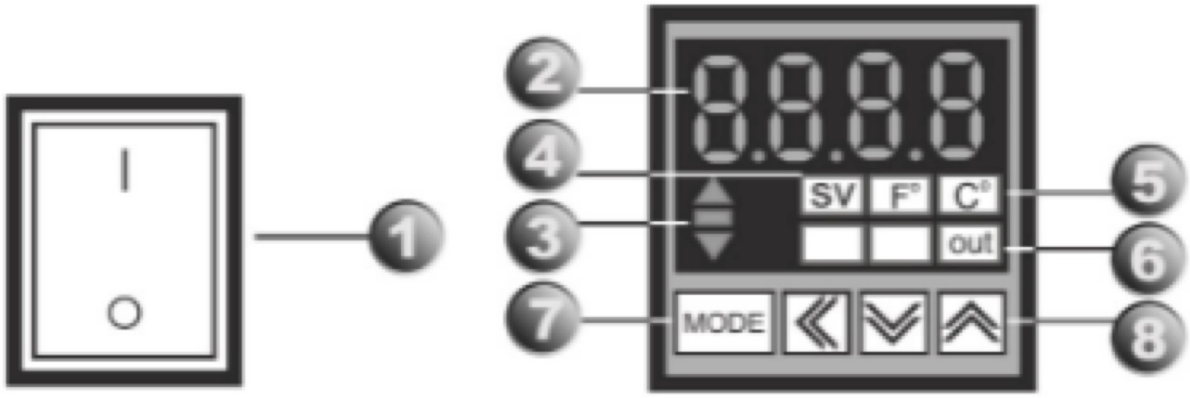

1. On/Off button
2. Temperature display
3. Temperature deviation indicator
4. Set temperature indicator
5. Temperature units indicator
6. Control output indicator
7. MODE button
8. Settings change buttons

5.2 Button Functions

1 - This button is used to turn the equipment on and off. Pressing the button to the «I» position turns the equipment on, and to the «0» position turns the equipment off.

2 - This display shows the current and set temperature values when you press any button.
3 (▲ I ▬ I ▼) -
▲- This indicator signals that the current temperature is higher than the set temperature.
▼ - This indicator signals that the current temperature is lower than the set temperature.
▬ - This indicator signals whether the current and set temperatures correspond.
4 (**SV**) - This indicator is used to check or change the current value of the set temperature
5 - This indicator displays the selected temperature unit (C or F)
6 (**OUT**) - This indicator lights up when the heating elements are turned on.
7 (**MODE**) - This button is used to enter/exit the setting mode, as well as save the set values
8 - These keys are used to change the setting values

5.3 Operating modes and technologies

5.3.1 Chocolate tempering

Option 1 – Sowing stable crystals:
– Heat up the chocolate to 42-45°C by setting up the required temperature (or the temperature recommended by the chocolate manufacturer);
– On the controller change the temperature setting to the operating temperature of the chocolate (33°C or the value recommended by the chocolate manufacturer);
– Add 20-30% chocolate pieces to the heated chocolate mass;

IMPORTANT! The pieces must be tempered and of the same size. The larger the pieces, the more you'll need.

– Stir thoroughly until the pieces are completely dissolved. The pieces should melt completely once the set operating temperature is reached.;

IMPORTANT! If the chocolate pieces melt at a temperature of 34°C or higher, there's a high probability that the chocolate lacks the required amount of stable crystals. If the desired temperature is reached and the pieces have not melted, cover the container with a lid and stir again after 10-15 minutes until the pieces are completely dissolved.

– Remove the tester and check the temperature control;
– Once finished, set the temperature to 40-50°C and cover with a lid;
– To restart, repeat all steps again.

Option 2 – Classic Tempering:
Heat the chocolate to 42-45°C (or the temperature recommended by the chocolate manufacturer);
– On the controller, change the temperature setting to the chocolate's operating temperature (33°C or the chocolate manufacturer's recommended temperature);
– Remove a small amount of chocolate from the bath and pour it onto a marble or granite countertop;
– Repeatedly stirring the chocolate on a cool surface, lower the temperature to 26-27°C. The appearance of the chocolate can also be an indicator of successful results: the surface of the mixture should change from shiny and glossy to matte, and the chocolate should become significantly thicker;
– Collect the chocolate in a bowl and return it to the tempering container. Stir thoroughly. The temperature of the chocolate mixture should be within the working temperature range of the chocolate;
– Take a sample and check the tempering quality;
– Once finished, set the temperature to 40°C and cover with a lid;
– To start again, repeat all steps again.

5.3.2 Quick Start

– For a quick start, the chocolate in the container must be tempered. This technique is suitable if you plan to continue working soon (for example, the next day or in 1-2 days);
– At the end of the work shift, set the controller temperature to 36-37°C (depending on the room temperature);
– Cover the container with a lid and leave until the start of the next work shift;
– Set the operating temperature to 33°C (93°F) and thoroughly mix the resulting chocolate crust with the warm chocolate at the bottom until smooth (the temperature should not exceed 33°C (93°F)).
– Take a sample and check the tempering quality.
– Once the operation is complete, set the controller to 36-37°C (depending on the room temperature).

5.3.3 Chocolate recrystallisation

Recrystallization of chocolate is a process in which a mass of chocolate, while maintained at a constant temperature (e.g., 33°C), changes its viscosity to a more viscous one. After 1-2 hours of working with prepared chocolate, recrystallization begins (manifested as an increase in the product's viscosity). To restore chocolate to its normal state, simply heat it evenly with a hairdryer to a temperature of 33.5–34°C (or add hot chocolate at 37–50°C). The amount of chocolate added is determined experimentally, based on temperature conditions and the degree of recrystallization.

IMPORTANT! When adding hot chocolate, stir the mixture thoroughly and constantly to ensure even temperature distribution. Also, continuously monitor the temperature with an external temperature measuring device (e.g., a pyrometer).

5.3.4. Adding chocolate to the tempering bowl

It's much more efficient to always keep the tempering vessel at least half full. This ensures consistent and long-lasting chocolate handling.
To add the chocolate to the container without melting it, it must be hot (37-45°C). It's also important to stir the mixture gradually and thoroughly and monitor the temperature with a pyrometer (it shouldn't exceed 33°C).

5.4 Warning

The manufacturer is not responsible for the results of the consumer's work if these results are related to the specific features of the technological process, the specific ingredients used, or the practical skills of the operator working on this equipment.

5.5 Controller manual

Code	Meaning	Note Примечание
LoC	LoC2	Block activation
LoC	oFF	Block deactivation

Текст

5.5.1 Blocking and unblocking

Turn on the device, press and hold the MODE button until the PAr2 parameter appears on the screen, then release the button.
Controls:
Use the MODE button to select a code, use the up button to change the value, and pressing the MODE button again will save the value. Use the up button to find the "LoC" parameter and select "Loc2" (to exit, select the OFF parameter), then press the MODE button.

Code	Meaning	Note
In-t	dPtL	Temperature sensor
Uni t	C°	Temperature unit
L-Su	20	Lower temperature level
H-Su	50	Upper temperature level
o-Ft	HEAt	Operating mode (heating / cooling)
C-nd	PI d	Regulation type
oUt	SSr	Solid state relay control selection
SSr.n	CYCL	Operating mode (cyclic / phase)

If all of the above conditions have been met and this has not resulted in the desired result, please inform your KADZAMA representative of all the steps you have taken for further consultation.

5.5.2 Setting up primary parameters

You must first unlock the settings. To do this, refer to Section 5.5.1. Then, turn on the device, press and hold the MODE button on the controller until the PAr2 parameter appears on the screen, and then release the button.
Controls:
Use the MODE button to select a code, use the "up" button to change the value, and pressing the MODE button again will save the value. Below is a list of parameters and values required for proper operation.
After entering all the parameters, press the MODE button again for 2-3 seconds to exit the setup mode; the controller will display the temperature again.

6. Maintenance and repair

6.1 General information

Chocolate should never come into contact with water or other liquids when used in equipment. Otherwise, bacteria and mold may develop. If bacteria are detected in a product produced on this equipment, production should be stopped immediately and the manufacturer should be contacted for disinfection.

Non-standard machine maintenance should only be performed by manufacturer-approved technicians.
Customer training includes only basic maintenance instructions.
The manufacturer recommends a complete general service every two years to ensure safety and warranty compliance.

You can always contact us as the machine manufacturer. We can quickly assist you with our technical staff. The manufacturer's instructions for servicing or replacing parts installed on the equipment must be followed.

6.2 General safety precautions

Before commencing any maintenance work, the machine must be disconnected from the electrical supply and all necessary safety precautions must be taken.

Caution!
During maintenance work, the following information sign must be clearly visible on the control panel or another visible location on the machine: "MACHINE UNDER MAINTENANCE - DO NOT OPERATE."

Servicing work on this machine should only be performed by experienced personnel who have completed training in the following subject:

- Maintenance Mechanic
- Maintenance Electrician

Your facility's safety specialist is responsible for the professionalism and competence of your maintenance technicians.

6.3 Breakdowns and repairs

Before starting maintenance work, your safety specialist must either supervise or perform the following:

- Remove any extraneous materials from the work area and keep people at a safe distance.
- Ensure that the necessary tools required by the maintenance technician are available and in good condition.
- Ensure that lighting in the area is sufficient, and that a portable low-voltage lamp is ready for use if needed.
- The service technician must be equipped with the appropriate personal protective equipment required for the job (gloves, safety glasses, boots, etc.).
- Ensure that the service technician has carefully read the instructions in this manual and is familiar with the operation of the machine.

After each maintenance job and before restarting the machine, the following procedures must be performed:
- The work area floor must be cleaned if that could cause slipping or tripping.
- Protective panels should be replaced, and all safety components and devices should be checked for proper operation. If they were previously disabled, ensure they are re-enabled.
- It should be noted that all personnel must remain at a safe distance before starting the machine.
- Before starting production, a maintenance technician must check the machine's operation, the safety mechanisms, and the integrity of fixed protective elements.
- Before using the machine again, it must be cleaned according to the instructions.

Information signs should be cleaned with a cloth, soap, and water. Avoid chemicals.
At the beginning and end of each maintenance, dust and other trash should be removed with a vacuum cleaner. Suitable solvents can be used if necessary.
However, high-pressure air jets should be avoided, as they can pollute the environment and cause harm to people.

After each maintenance, the machine must be checked by a safety expert to ensure that it is operating properly and that all safety devices are accessible and operational.

The settings and positions of restricted-access microswitches should never be changed unless it is clearly necessary to correct a malfunction. Machines and operators can be seriously injured if they are moved.

Machine parts that have been washed with water or other liquids should always be thoroughly dried before reassembly or dried with an auxiliary device that uses high-pressure air circulation.

Work on electrical components must only be carried out by electrical service technicians, authorized by a safety expert or persons trained for this purpose.

6.4 Cleaning external parts

When cleaning the machine, appropriate personal protective equipment should be used.

Light stains should be removed with a dry, soft cloth or a flexible-bristled brush. If stains are too stubborn and difficult to remove with a dry cloth or brush, use food-grade cleaners (approved by the Ministry of Health). Avoid using flammable or toxic substances.

6.5 Cleaning mechanical parts

Cleaning of any removable components should be carried out in accordance with specific instructions and diagrams for removal and installation.
If a detailed diagram of the parts is not available, we recommend marking the location of the removed parts. This will prevent errors during reassembly..Always use the correct size wrench. Replace screws and bolts that show signs of wear on the teeth and heads. When tightening screws, do not tighten the wrench to the full torque limit to avoid damaging it.Pneumatic and hydraulic tools should be used with extreme caution. Heavily oxidized components should be cleaned with an antioxidant (rust remover) before removal. Before reassembling the parts, lubricate the connections with a thin layer of vegetable oil. Any special seals and bolts used by the manufacturer that show signs of wear should also be replaced.

6.6 Electrical diagram

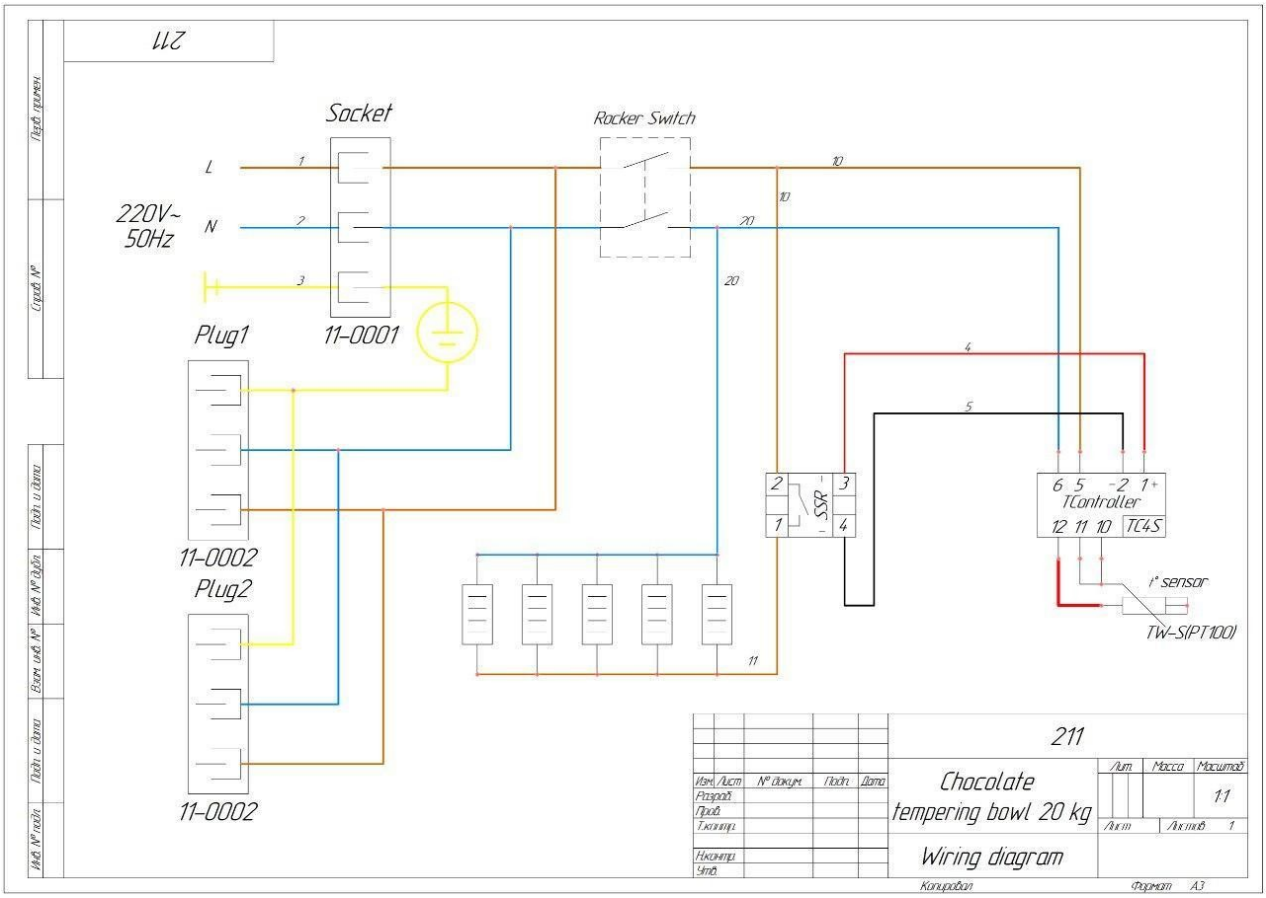

6.7 Checklist of malfunctions

If the tempering tank does not start, follow these steps:
— Check the equipment's power cable; it must be undamaged and properly connected to the device;
— The socket where the equipment is connected has a voltage that corresponds to the power supply parameters specified in the technical specifications of the device being connected (your building may be completely de-energized, or the circuit breaker responsible for this socket may be turned off in the distribution board of the premises);
—The equipment plug is connected to the socket correctly and completely;
— Turn on the device and ensure the indicator on the controller lights up. The controller will display the actual temperature, which will eventually begin to move toward the set temperature, which can be adjusted using the up and down buttons.
— When turning on, check all the internal walls of the appliance with your hand; they should begin to heat up. To check for uniform heating, you can apply a piece of masking tape to each wall and use a pyrometer to record the temperature readings, after turning on the appliance and allowing it to reach the set temperature (please note that the pyrometer cannot correctly take readings from reflective, metal surfaces);
— If after the set temperature the container still continues to heat up or there are other deviations, it is recommended to perform an initial adjustment of the controller; If all of the above conditions are met and the equipment still cannot be restored to working order, please inform your KADZAMA representative of all the steps you have taken for further assistance.